Wall DrinkFill aquaBUBBLER

Complete Hydration Solution – Zero Floor Space!

AS1428



The **Wall DrinkFill** aquaBUBBLER is a wall mounted indoor/outdoor drinking fountain comprising two individual units: one for drinking and one for bottle refill. The two All Abilities Palm Push taps require minimal force to operate (18 N to initiate, and 15 N to maintain flow). Both units are AS1428 compliant and each can be mounted at any height desired.

Installing **Wall DrinkFill** aquaBUBBLER in busy thoroughfares is an effective use of wall space: making your drinking water point visible and accessible to everyone on their way through.

The streamline design of the **Wall DrinkFill** aquaBUBBLER allows for tidy integration of the unit body to the wall, and an easy-install 304 SS bracket provides secure attachment.

The **Wall DrinkFill** is manufactured and assembled entirely in Australia and is available in a variety of heights and colours.

The **Wall DrinkFill aquaBUBBLER** features:

- large self-closing push button (operable by one hand)
- non-squirt water exit nozzle
- soft-feel Drinking Tap mouth guard
- 1 x Drinking Tap (2L/Min)
- 1 x Bottle Refill Tap (3L/Min)
- adjustable water pressure
- hygienic stainless steel dish
- vandal resistant & graffiti proof
- ergonomic contemporary design
- super durable & hardwearing
- Stainless Steel Splashback option

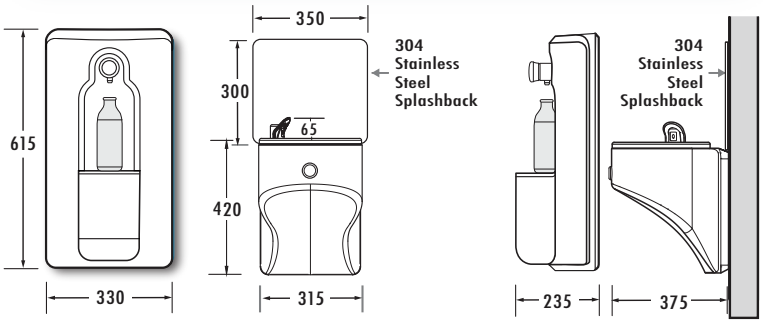

Signature Colour Palette:



Corella White | Light Grey | Mid Grey | Charcoal Grey | Dusky Blue | Denim Blue | Gumleaf Green | Rich Blue | Pacific Blue | Light Green | Sunset Yellow | Tiger Orange | Chilli Red | Heritage Red

For our complete colour listing visit: bit.ly/coloursCC ▶

All body colours are matte with a fine, granulated surface finish.